BAKER®
WATER SYSTEMS - EST 1873

Rusco™ inc.

SEDIMENT FILTRATION FOR ALL SIZE SYSTEMS

Rusco's complete line of SpinDown™ Sediment and Sediment Trapper™ Model Filters make solid particle removal simple and economical.

- Centrifuge Spin-Down type sediment separation
- Clear cover easily removed for total cleaning (no tools required*)
- Sediment is visible through cover Reusable elements with polyester and stainless steel screens are available in various mesh sizes
- Flow capacity for entire system
- All molded non-corrosive materials
- Available in 4 sizes:
  3/4" MPT, 1", 1-1/2" and 2" slip x
  slip connections in and out (optional bushings are available for 1", 1-1/2" and 2" FPT connections)
- High performance models available for chemical applications;
- 3/4", 1-1/4" and 1-1/2" models available for hot water applications to 200°F (93°C)

Baker Mfg. | Phone: 800-356-5130 | Email: bws@baker-mfg.com | www.bakerwatersystems.com

BAKER® WATER SYSTEMS - EST 1873 Monitor Campbell MONOFLEX Wilbond Pumps

Rusco™ inc.

SPIN-DOWN™ SEDIMENT FILTERS

- Clear Cover is easily removed for total cleaning (No tools required*)
- Flow capacity for entire system
- Sediment is visible through the clear cover indicating when the filter needs cleaning
- Sediment is quickly and easily removed by opening the ball valve at the bottom of the filter cover
- **Reusable polyester and stainless steel element screens in many mesh sizes**
- No down time

*Using tools voids warranty

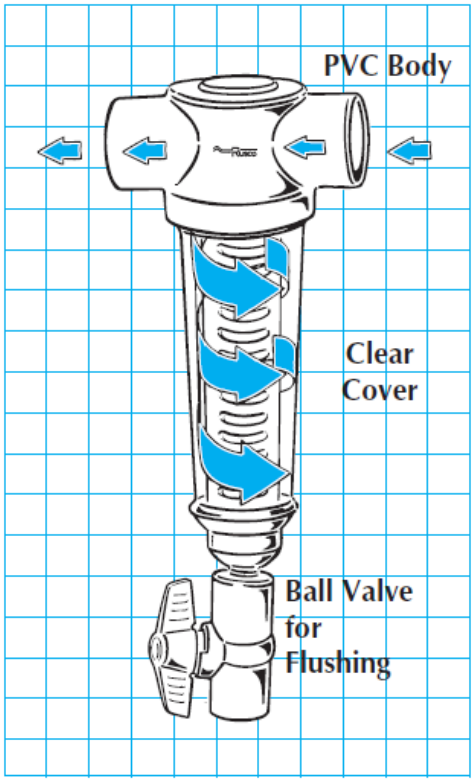

Filter Elements

Polyester and stainless steel element screens are available in many mesh sizes to meet your requirements.

Covers*

Rusco™ Sediment Filter covers are made of high impact polymer resin for maximum strength and durability. 1/2" MPT nipple on bottom of cover for connection of plastic ball valve for easy cleaning.

Body

Rusco™ SPIN-DOWN™ Sediment Filter bodies are PVC material in 3/4" MPT, 1", 1-1/2" and 2" slip x slip connections in and out. Bushings are available to convert 1", 1-1/2" and 2" slip by slip connections to female pipe thread.

* High performance covers available for use in chemical applications. Please refer to our chemical application chart for suitability.

Filter Dimensions

Size	3/4"	1"	1-1/2"	2"
Length	11-3/8"	11-3/8"	15-3/8"	17-7/8"
Width	7-1/4"	5"	5-1/4"	5-1/2"

*With ball valve attached.

Element Screen Sizes

• Polyester

Mesh	Microns	Opening
24	711	.028"
30	533	.021"
40	381	.015"
60	254	.010"
100	152	.006"
140	104	.004"
250	61	.0024"
500	30	.0012"
1000	15	.0006"

Also available in Stainless Steel

SPIN-DOWN™ SEDIMENT TRAPPER™ FILTERS

- Unique element design traps sediment in lower reservoir of clear cover
- Clear bowl easily removed for total cleaning (No tools required*)
- Flow capacity for entire system
- Sediment is visible through the clear cover indicating when the filter needs cleaning
- No down time
- Ball valve allows for quick sediment removal from bottom of cover
- Centrifuge Spin-Down type sediment separation
- Reusable polyester and stainless steel element screen available in many mesh sizes from very fine to very coarse

*Using tools voids warranty

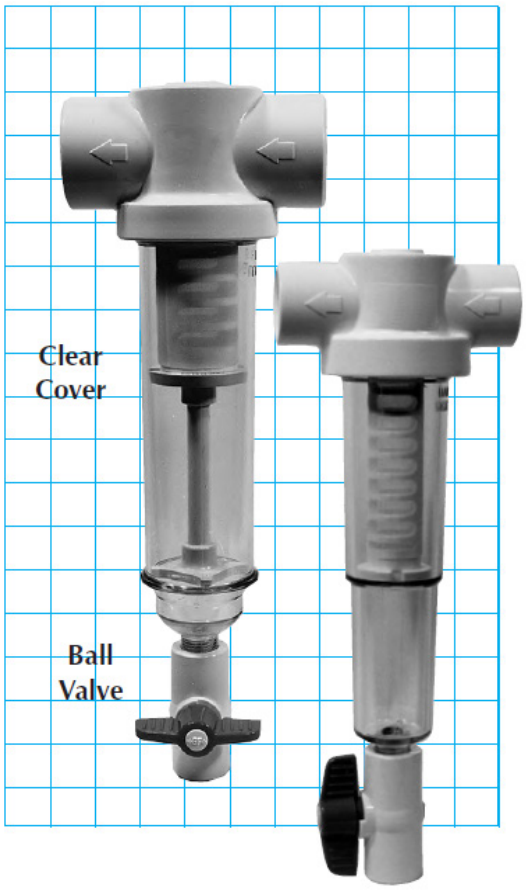

Filter Elements

The unique design of the sediment trapper™ element allows debris to settle in the bottom of the clear cover, trapping sediment away from the screen. The new 1-1/2” and 2” model elements make it easy to convert a standard spin-down™ filter to a Sediment Trapper™ by simply replacing the elements which are available with either polyester or stainless steel screens to suit your needs and can be ordered in various mesh sizes.

Filter Dimensions

Size	3/4”	1”	1-1/2”	2”
Length	14-3/8”	14-3/8”	15-3/8”	17-7/8”
Width	7-1/4”	5”	5-1/4”	5-1/2”

*With ball valve attached.

Element Screen Sizes
• Polyester

Mesh	Microns	Opening
24	711	.028”
30	533	.021”
40	381	.015”
60	254	.010”
100	152	.006”
140	104	.004”
250	61	.0024”
500	30	.0012”
1000	15	.0006”

Also available in Stainless Steel

ORDERING INFORMATION

Spin-Down™ model filters are ordered by size# and mesh size. When ordering stainless steel element, add SS to part number.

Example:
3/4-1 00SS-F is a 3/4" Filter with a 100 mesh stainless steel element screen and flush valve.

When ordering a Sediment Trapper™ model filter use size #, mesh size, ST designation, and if stainless steel element screen is desired, add SS.

Example:
1-1 00STSS-F is a 1" Filter Sediment Trapper™ with a 100 mesh stainless steel element screen and flush valve.

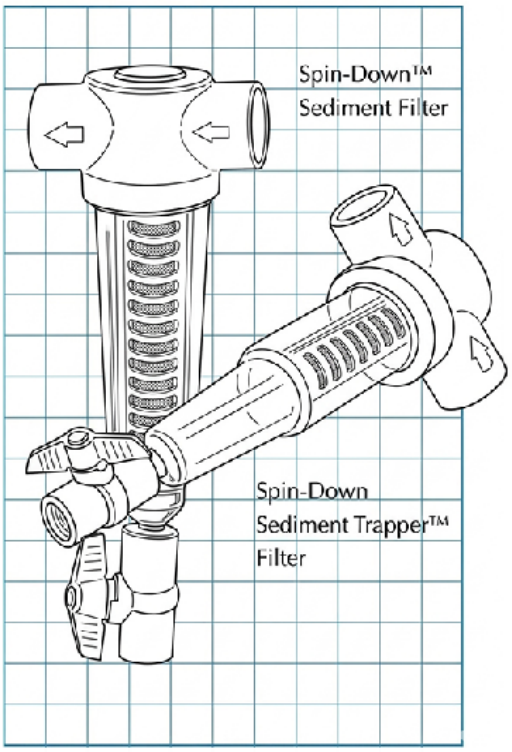

Case Quantities:

Al I Models - 10 per Case
All filters are individually boxed to prevent loss or damage.

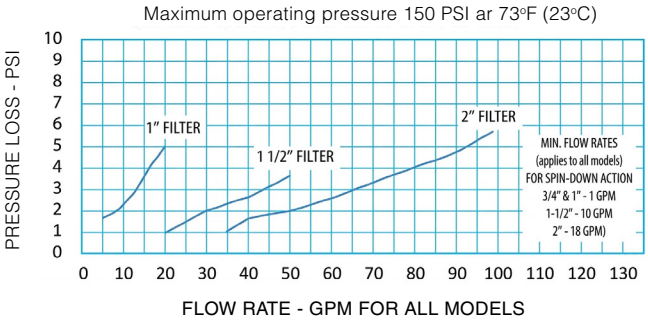

Warranty & Disclaimer

RUSCO, Inc-. warrants, to the original purchaser. that its products Will be free from original defects in material and workmanship. RUSCO, Inc. will repair or replace all parts without charge, found to be defective under normal use and service within the warranty period upon return of products at customer's expense,
The components of all RUSCO products are warranted for a period of 12 months from date of original sale. RUSCO's liability is solely limited to the original cost of the part. RUSCO will not be responsible for incidental or consequential damages. No agent or representative has the authority to waive or alter this printed warranty. THIS WARRANTY IS EXCLUSIVE AND IS IN LIEU OF ALL OTHER WARRANTIES EXPRESSED OR JMPUED, INCLUDING WARRANTIES OF MERCHANTABILITY AND WARRANTIES OF FITNESS FOR A PARTICULAR PURPOSE.
RUSCO reserves the right to redesign or modify its products without incurring further liability. Prices are subject to change at any time without notice.
USE OF TOOLS WILL VOID WARRANTY -HAND TIGHTEN ONLY.

Baker Mfg. | Phone: 800-356-5130 | Email: bws@baker-mfg.com | www.bakerwatersystems.com